LACUNZA 50
Natural comfort

Home > Freestanding stoves > MAULE

MAULE

New Nordic aesthetic freestanding stove with double function

ecoDESIGN Ready!

Efficiency	Emissions CO	NOx emissions	OGC emissions	Particles
81,0 %	0,06 %	120 mg	33 mg	18 mg

DIMENSIONS

TOTALS (mm)	758	873	537
FIREBOX (mm)	572	315	383

TECHNICAL DATA
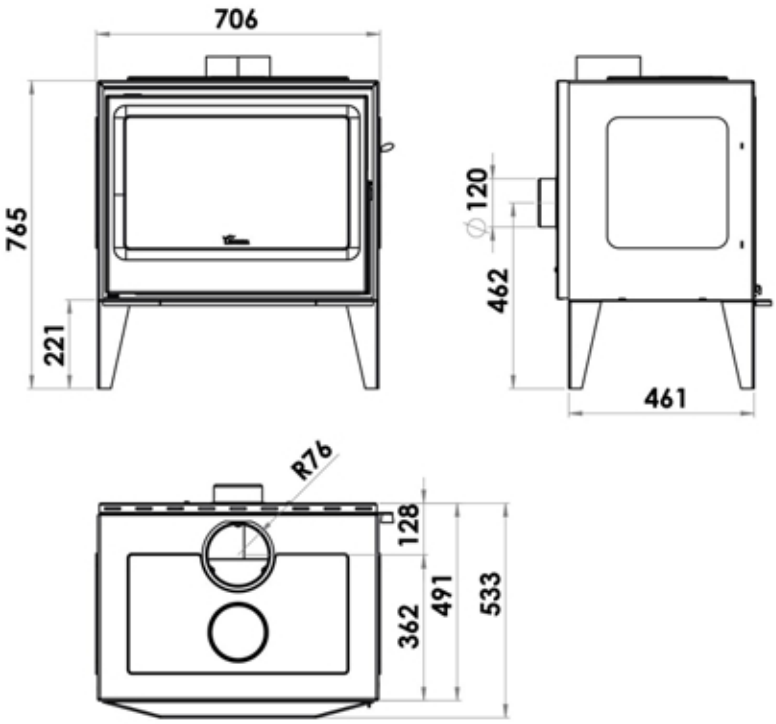
Heat output range 5-9 kW	Nominal heat output 7,0 kW	Efficiency 81,0 %
Emissions CO 0,06 %	Heating volume 160 m³	Heating area 64 m²
Weight 190 kg	Flue socket Ø150 mm	Firewood measure 55 cm